Robotics and Its Application AI352

Unit 2: Kinematics

Topics Cover: Introduction to Kinematics, Coordinate Frames and Transformations, Forward and Inverse Kinematics Parameters, Numerical Solution, Jacobian matrix and Singularities

By Dr. Aaishwarya Bajaj

Teaching Assistant DoAI, SVNIT,Surat

Robot Kinematics

Robot Kinematic is the geometric study of how robot do motions, analysing the relationship between joints angles and the position/ orientation of the end effector without considering forces, important for planning movements, calculation positions and programming tasks like picking and placing

Robot Kinematics

Forward Kinematics

Inverse Kinematics

1. Forward Kinematics: The process of calculating the final position and orientation of a robotic arm's end-effector (like a gripper) based on the known angles and extensions of its joints.
2. Inverse Kinematics: The process of calculating the final position and orientation of a robotic arm's end-effector (like a gripper) based on the known angles and extensions of its joints.

Robot Kinematics

Representation of an object in 3-D

- Find the Mass centre of the object i.e., Q
- At the mass centre we draw coordinate system (X_B, Y_B, Z_B)
- Determine position of the mass centre Q by moving along X, Y and Z
- Represent the orientation of the object we require 6 information (3 position, 3 Rotation)

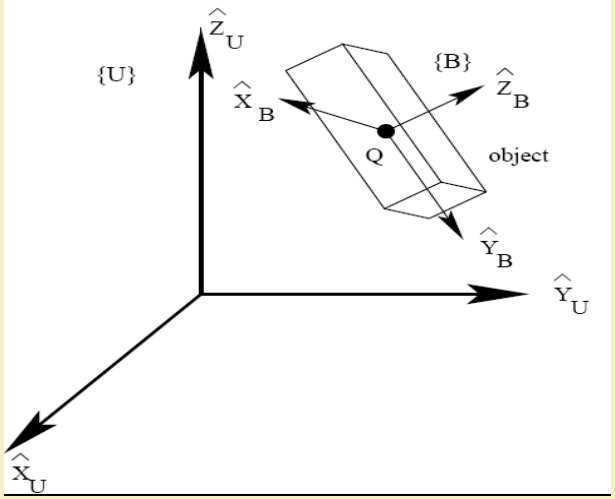

Representation of the position

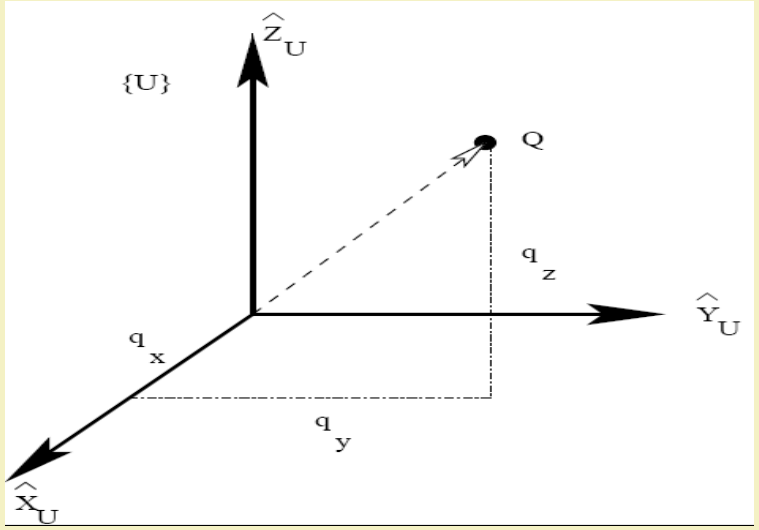

$$^{U}\overline{Q} = \begin{bmatrix} q_x \\ q_y \\ q_z \end{bmatrix} \text{; 3x1 matrix}$$

Representation of the Orientation

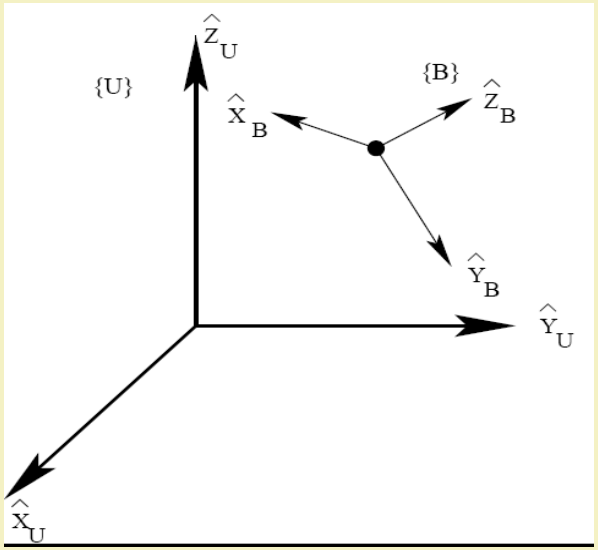

$$ {}^{U}_{B}R = [\,{}^{U}\hat{X}_B \;\; {}^{U}\hat{Y}_B \;\; {}^{U}\hat{Z}_B\,] $$

3x3 matrix

Rotation of Body(B) co-ordinate system w.r.t. Universal coordinate system (U)

Frame Transformations

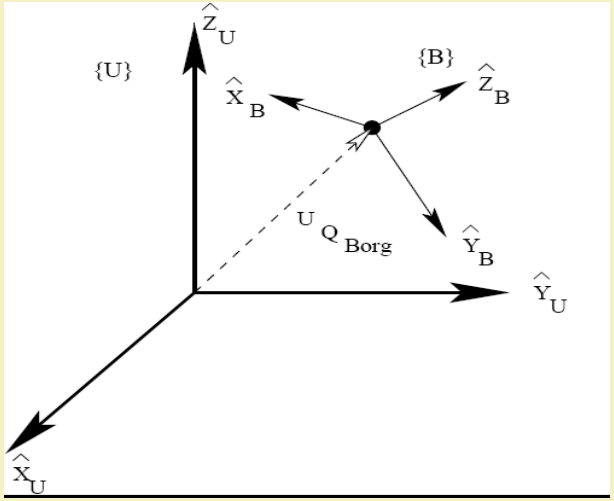

Frame: A set of four vectors carrying position and orientation information

Translation of a Frame

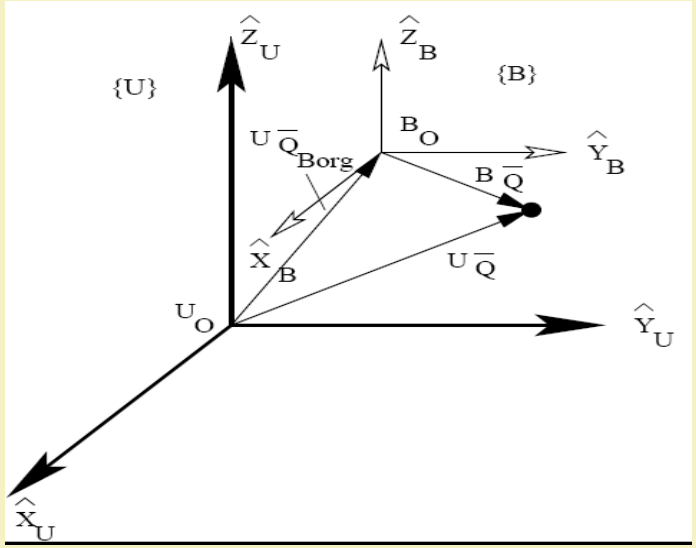

$$^U\overline{Q} = {}^U\overline{Q}_{Borg} + {}^B\overline{Q}$$

Rotation of a Frame

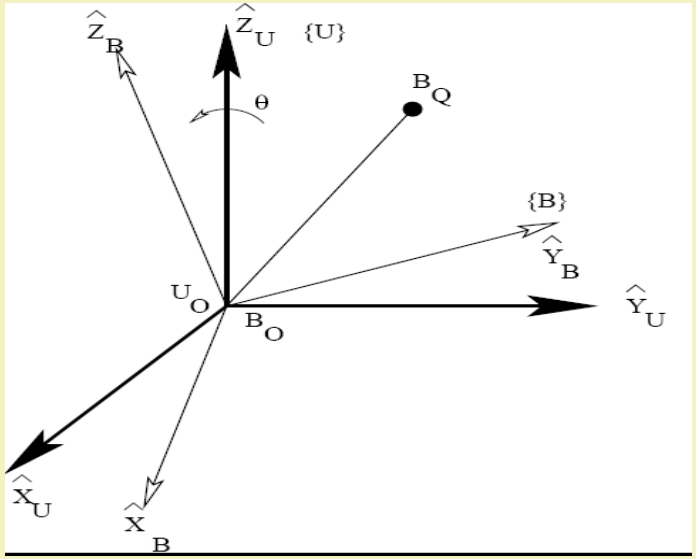

$$^U\overline{Q} = {}^U_B R \, {}^B\overline{Q}$$

Translation and Rotation of a Frame

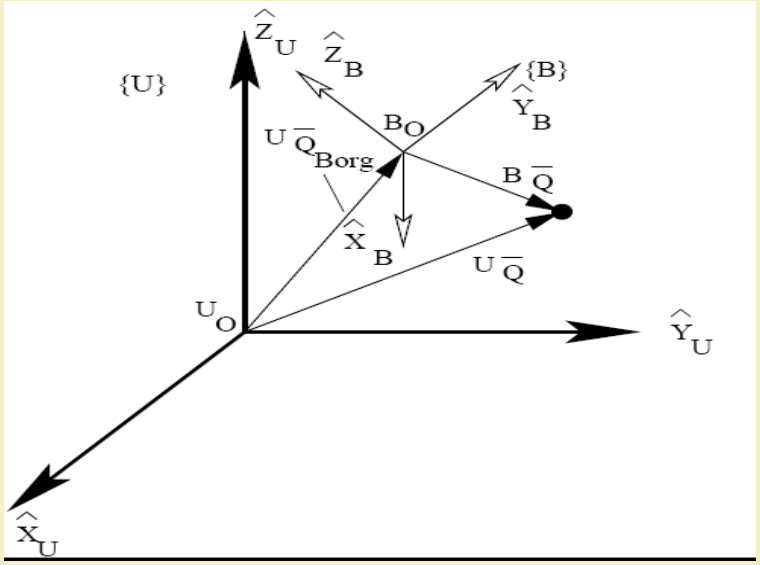

$$^U\overline{Q} = {}^U_B R \, {}^B\overline{Q} + {}^U\overline{Q}_{Borg}$$

$$^U\overline{Q} = {}^U_B R \, {}^B\overline{Q} + {}^U\overline{Q}_{Borg}$$

$$\Rightarrow {}^U\overline{Q} = {}^U_B T \, {}^B\overline{Q}$$

where **T**: transformation

$$\Rightarrow \begin{bmatrix} {}^{U}\overline{Q}(3x1) \\ ---- \\ \\ \end{bmatrix} = \begin{bmatrix} {}^{U}_{B}R(3x3) & | & {}^{U}\overline{Q}_{Borg}(3x1) \\ ---- & | & ---- \\ & | & \end{bmatrix} \begin{bmatrix} {}^{B}\overline{Q}(3x1) \\ ---- \\ \\ \end{bmatrix}$$

$$\Rightarrow \begin{bmatrix} {}^{U}\overline{Q}(3x1) \\ ---- \\ 1 \end{bmatrix} = \begin{bmatrix} {}^{U}_{B}R(3x3) & | & {}^{U}\overline{Q}_{Borg}(3x1) \\ ---- & | & ---- \\ 0 \quad 0 \quad 0 & | & 1 \end{bmatrix} \begin{bmatrix} {}^{B}\overline{Q}(3x1) \\ ---- \\ 1 \end{bmatrix}$$

Let **[T]**: Homogeneous transformation matrix

$$[T] = \begin{bmatrix} {}^{U}_{B}R(3x3) & | & {}^{U}\overline{Q}_{Borg}(3x1) \\ ---- & | & ---- \\ 0 \quad 0 \quad 0 & | & 1 \end{bmatrix}$$

Say

$$[T] = \begin{bmatrix} r_{11} & r_{12} & r_{13} & q_x \\ r_{21} & r_{22} & r_{23} & q_y \\ r_{31} & r_{32} & r_{33} & q_z \\ 0 & 0 & 0 & 1 \end{bmatrix}$$

Translation Operator

$\text{Trans}\left(\hat{X}, q\right)$: Translation of q units along x-direction

$$\text{Trans}\left(\hat{X}, q\right) = \begin{bmatrix} 1 & 0 & 0 & q \\ 0 & 1 & 0 & 0 \\ 0 & 0 & 1 & 0 \\ 0 & 0 & 0 & 1 \end{bmatrix}$$

Note: Trans operators are commutative in nature

$$\text{Trans}\left(\hat{X}, q_x\right)\text{Trans}\left(\hat{Y}, q_y\right) = \text{Trans}\left(\hat{Y}, q_y\right)\text{Trans}\left(\hat{X}, q_x\right)$$

Rotational Operator

$\mathrm{Rot}(\hat{Z},\theta)$: Rotation about $\hat{Z}$ axis by an angle θ (anticlockwise sense)

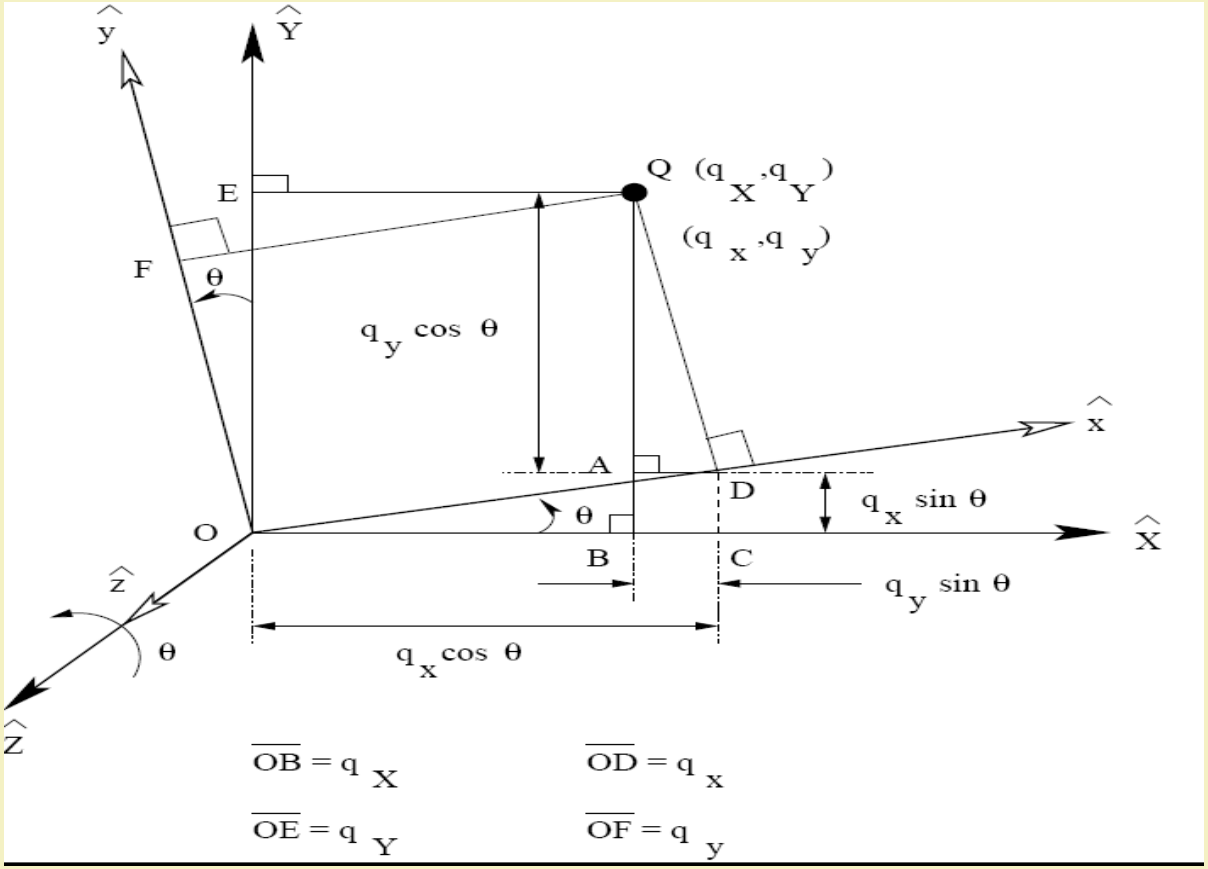

$$\overline{DC} = q_x \mathrm{Sin}\theta \quad \overline{OC} = q_x \mathrm{Cos}\theta$$

$$\overline{AQ} = q_y \mathrm{Cos}\theta \quad \overline{AD} = BC = q_y \mathrm{Sin}\theta$$

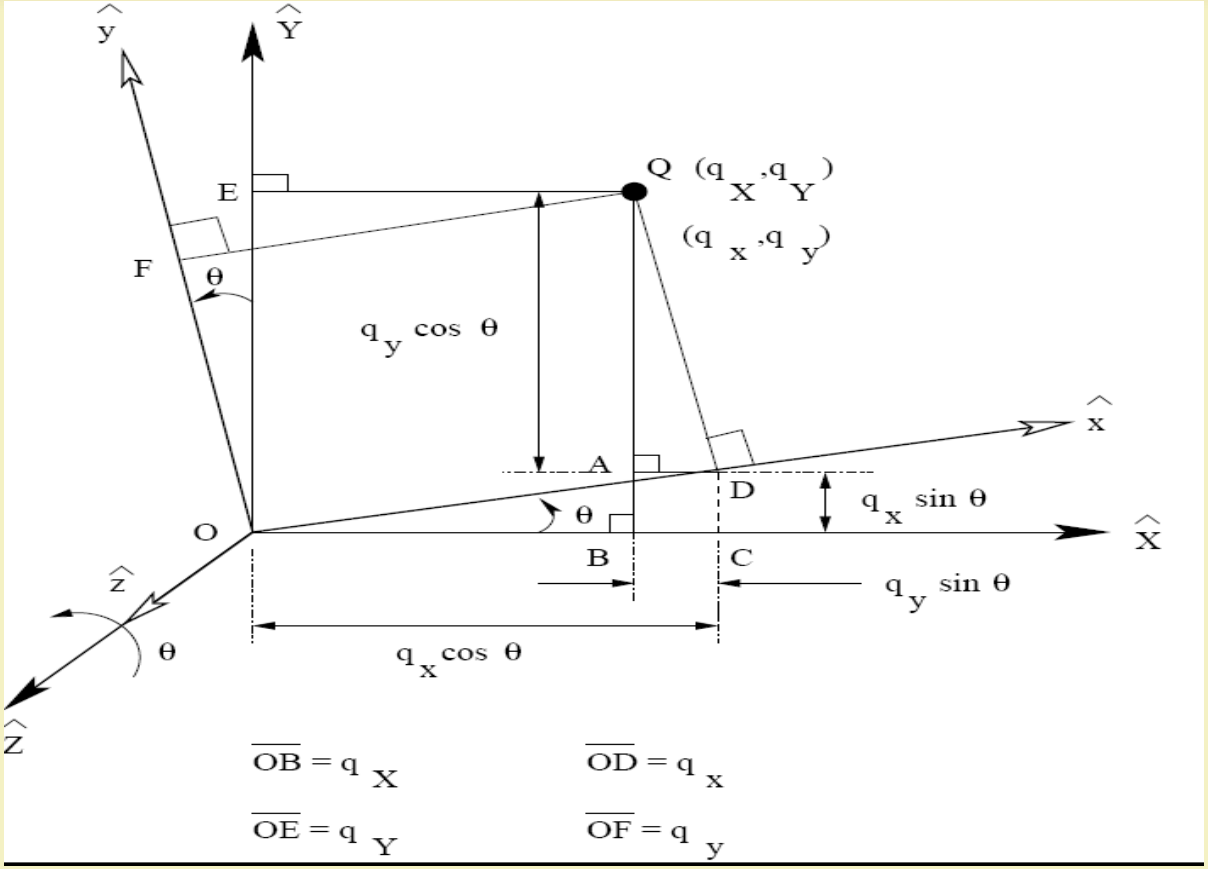

$$q_X = q_x \mathrm{Cos}\theta - q_y \mathrm{Sin}\theta + q_z X0$$

$$q_Y = q_x \mathrm{Sin}\theta + q_y \mathrm{Cos}\theta + q_z X0$$

$$q_Z = q_x X0 + q_y X0 + q_z X1$$

$$q_X = q_x \mathrm{Cos}\theta - q_y \mathrm{Sin}\theta + q_z X0$$
$$q_Y = q_x \mathrm{Sin}\theta + q_y \mathrm{Cos}\theta + q_z X0$$
$$q_Z = q_x X0 + q_y X0 + q_z X1$$

In matrix form:

$$\begin{bmatrix} q_X \\ q_Y \\ q_Z \end{bmatrix} = \begin{bmatrix} \cos\theta & -\sin\theta & 0 \\ \sin\theta & \cos\theta & 0 \\ 0 & 0 & 1 \end{bmatrix} \begin{bmatrix} q_x \\ q_y \\ q_z \end{bmatrix}$$

$$\mathrm{Rot}\left(\hat{Z}, \theta\right) = \begin{bmatrix} \cos\theta & -\sin\theta & 0 \\ \sin\theta & \cos\theta & 0 \\ 0 & 0 & 1 \end{bmatrix}$$

Similarly, we get

$$\mathrm{Rot}\left(\hat{X},\theta\right)=\begin{bmatrix}1 & 0 & 0\\ 0 & \cos\theta & -\sin\theta\\ 0 & \sin\theta & \cos\theta\end{bmatrix}$$

$$\mathrm{Rot}\left(\hat{Y},\theta\right)=\begin{bmatrix}\cos\theta & 0 & \sin\theta\\ 0 & 1 & 0\\ -\sin\theta & 0 & \cos\theta\end{bmatrix}$$

Properties of Rotation Matrix

- Each row/column of a rotation matrix is a unit vector
- Inner (dot) product of each row of a rotation matrix with each other row becomes equal to 0. The same is true for each column also.
- Rotation matrices are not commutative in nature

$$ROT(\hat{X},\theta_1)ROT(\hat{Y},\theta_2) \neq ROT(\hat{Y},\theta_2)ROT(\hat{X},\theta_1)$$

- Inverse of a rotation matrix is nothing but its transpose

$$ROT^{-1}(\hat{X},\theta) = ROT^{T}(\hat{X},\theta)$$

- ${}^{A}_{B}T = {}^{B}_{A}T^{-1}$

A Numerical Example

A frame {B} is rotated about $\widehat{X_U}$ axis of the universal coordinate system by 45 degrees and translated along $\widehat{X_U}$, $\widehat{Y_U}$ and $\widehat{Z_U}$ by 1, 2, and 3 units, respectively. Let the position of a point Q in {B} is given by [3.0 2.0 1.0]^T. Determine ${}^U\bar{Q}$.

Solution:

$$ {}^U\bar{Q} = {}^U_B R \times {}^B Q $$

$$ = \begin{bmatrix} 1 & 0 & 0 & 1 \\ 0 & Cos45 & -sin45 & 2 \\ 0 & sin45 & cos45 & 3 \\ 0 & 0 & 0 & 1 \end{bmatrix} \begin{bmatrix} 3 \\ 2 \\ 1 \\ 1 \end{bmatrix} $$

$$ = \begin{bmatrix} 4 \\ 2cos45 - sin45 + 2 \\ 2sin45 + co45 + 3 \\ 1 \end{bmatrix} = \begin{bmatrix} 4 \\ 2.707 \\ 5.121 \\ 1 \end{bmatrix} $$

Composite Rotation Matrix

Composite rotation matrix representing a rotation of α angle about $\hat{Z}$, followed by a rotation of β angle about $\hat{Y}$ axis , followed by a rotation of γ angle about $\hat{X}$ axis.

$$ROT_{composite} = ROT\left(\hat{X},\gamma\right)ROT\left(\hat{Y},\beta\right)ROT\left(\hat{Z},\alpha\right)$$

Rule: Whatever we state first will be written at the end

Representations of Position in Other Than Cartesian Coordinate System

Cylindrical Coordinate System

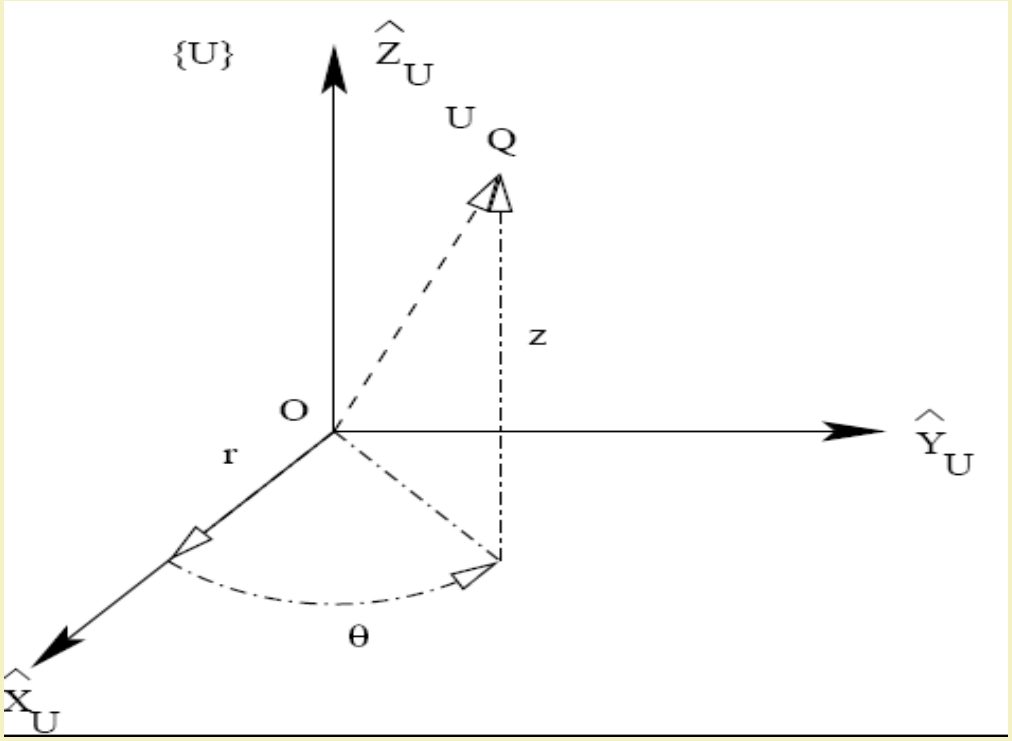

Steps:

1. Starting from the origin O, translate by r units along $\hat{X}_U$ axis
2. Rotate in anti-clockwise sense about $\hat{Z}_U$ axis by an angle θ
3. Translate along $\hat{Z}_U$ axis by z units

$$[T]_{composite} = TRANS\left(\hat{Z}_U, z\right) ROT\left(\hat{Z}_U, \theta\right) TRANS\left(\hat{X}_U, r\right)$$

$$= \begin{bmatrix} \cos\theta & -\sin\theta & 0 & r\cos\theta \\ \sin\theta & \cos\theta & 0 & r\sin\theta \\ 0 & 0 & 1 & z \\ 0 & 0 & 0 & 1 \end{bmatrix}$$

We get $q_x = r\cos\theta$

$q_y = r\sin\theta$

$q_z = z$

Spherical Coordinate System

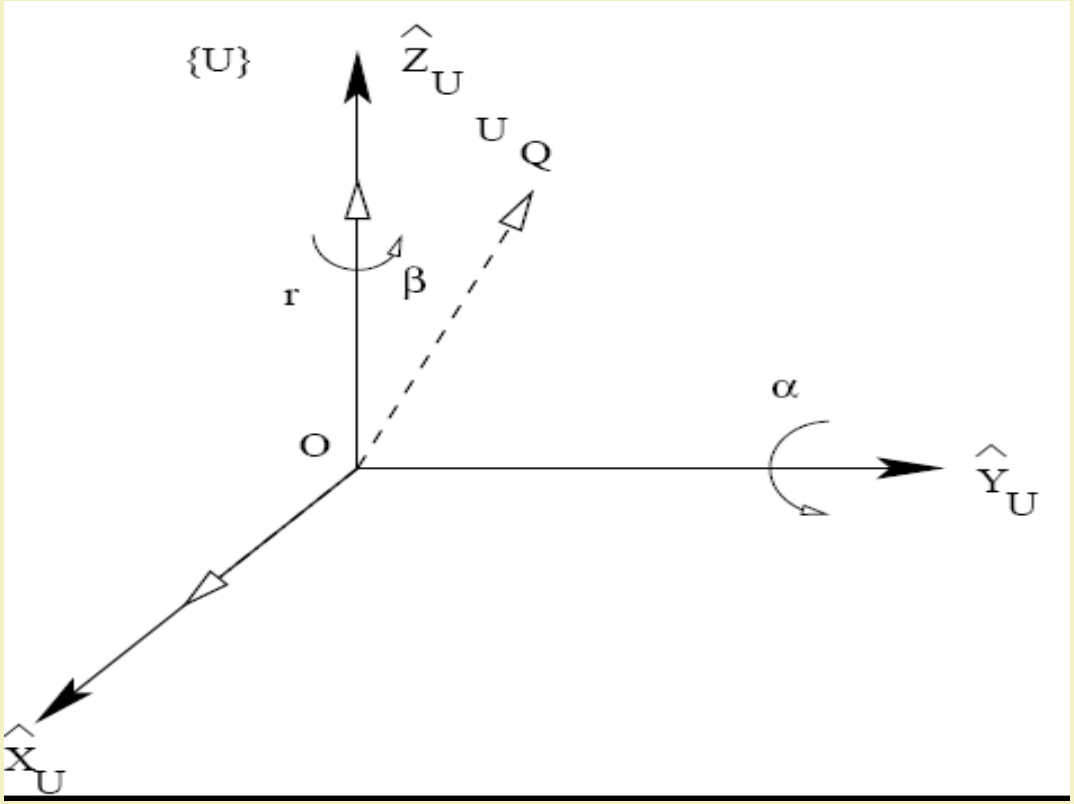

Steps:

1. Starting from the origin O, translate along $\hat{Z}_U$ axis by r units
2. Rotate in anti-clockwise sense about $\hat{Y}_U$ axis by an angle α
3. Rotate in anti-clockwise sense about $\hat{Z}_U$ axis by an angle β

$$[T]_{composite} = ROT\left(\hat{Z}_U, \beta\right) ROT\left(\hat{Y}_U, \alpha\right) TRANS\left(\hat{Z}_U, r\right)$$

$$= \begin{bmatrix} \cos\alpha\cos\beta & -\sin\beta & \sin\alpha\cos\beta & r\sin\alpha\cos\beta \\ \cos\alpha\sin\beta & \cos\beta & \sin\alpha\sin\beta & r\sin\alpha\sin\beta \\ -\sin\alpha & 0 & \cos\alpha & r\cos\alpha \\ 0 & 0 & 0 & 1 \end{bmatrix}$$

We get $q_x = r\sin\alpha\cos\beta$

$q_y = r\sin\alpha\sin\beta$

$q_z = r\cos\alpha$

Representations of Orientation in Other Than Cartesian Coordinate System

Roll, Pitch and Yaw Angles

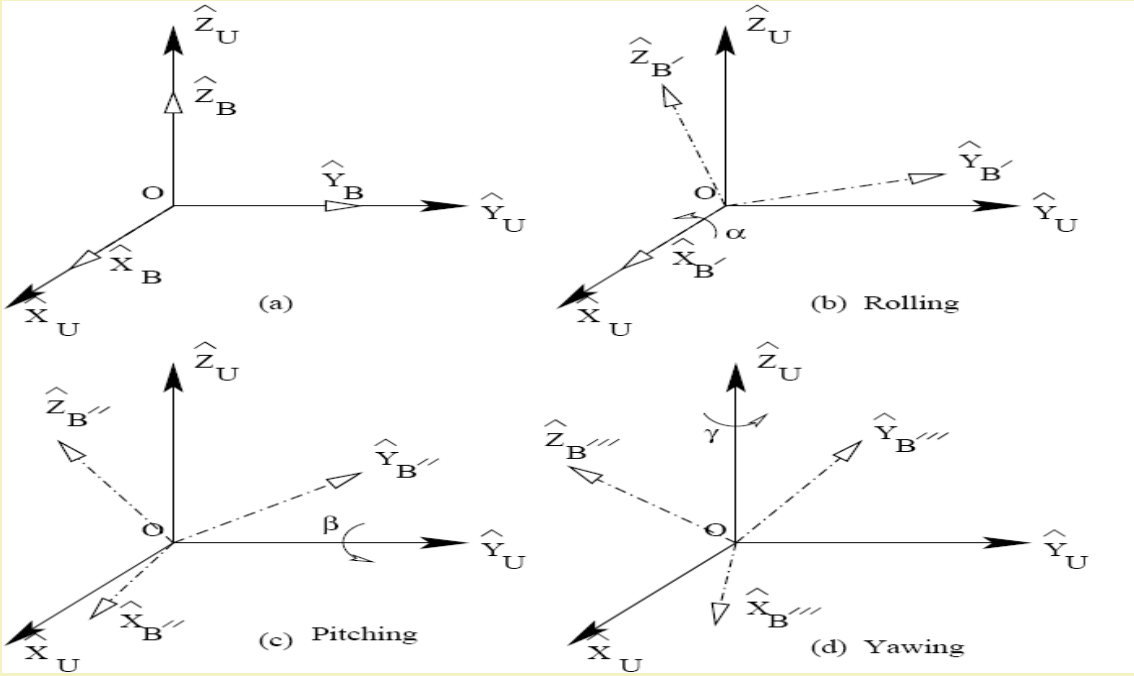

Steps:

Rotate {B} about $\hat{X}_U$ by an angle α ⇒ rolling

Rotate {B'} about $\hat{Y}_U$ by an angle β ⇒ pitching

Rotate {B"} about $\hat{Z}_U$ by an angle γ ⇒ yawing

$$ {}^{U}_{B}R_{\text{composite rpy}} = ROT\left(\hat{Z}_U, \gamma\right) ROT\left(\hat{Y}_U, \beta\right) ROT\left(\hat{X}_U, \alpha\right) $$

$$ = \begin{bmatrix} c\beta c\gamma & -c\alpha s\gamma + s\alpha s\beta c\gamma & s\alpha s\gamma + c\alpha s\beta c\gamma \\ c\beta s\gamma & c\alpha c\gamma + s\alpha s\beta s\gamma & -s\alpha c\gamma + c\alpha s\beta s\gamma \\ -s\beta & c\beta s\alpha & c\alpha c\beta \end{bmatrix} $$

We compare with

$$ {}^{U}_{B}R = \begin{bmatrix} r_{11} & r_{12} & r_{13} \\ r_{21} & r_{22} & r_{23} \\ r_{31} & r_{32} & r_{33} \end{bmatrix} $$

We get

$$\alpha = \tan^{-1}\left(\frac{r_{32}}{r_{33}}\right)$$

$$\beta = \tan^{-1}\left(\frac{-r_{31}}{\sqrt{r_{11}^2 + r_{21}^2}}\right)$$

$$\gamma = \tan^{-1}\left(\frac{r_{21}}{r_{11}}\right)$$

A Numerical Example

The concept of roll, pitch and yaw angles has been used to represent the rotation of a frame {B} with respect to the reference frame {U}, that is ${}^{U}_{B}R$. Let us suppose that the above rotation can also be expressed by a 3X3 rotation matrix as given below.

$$ {}^{U}_{B}R = \begin{bmatrix} -0.250 & 0.433 & -0.866 \\ 0.433 & -0.750 & -0.500 \\ -0.866 & -0.500 & 0.000 \end{bmatrix} $$

Determine the angles of rolling, pitching and yawing.

Solution:

Angle of rolling $\alpha = \tan^{-1}\frac{r_{32}}{r_{33}} = \tan^{-1}\frac{-0.500}{0.000} = 90°$

Angle of pitching $\beta = \tan^{-1}\frac{-r_{31}}{\sqrt{r_{11}^2 + r_{21}^2}}$

$$= \tan^{-1}\frac{0.866}{\sqrt{(-0.250)^2 + (0.433)^2}}$$

$$= 40.89°$$

Angle of yawing $\gamma = \tan^{-1}\frac{-r_{21}}{r_{11}} = \tan^{-1}\frac{0.433}{-0.250}$

$$= -59.99 \approx -60°$$

Using Euler Angles

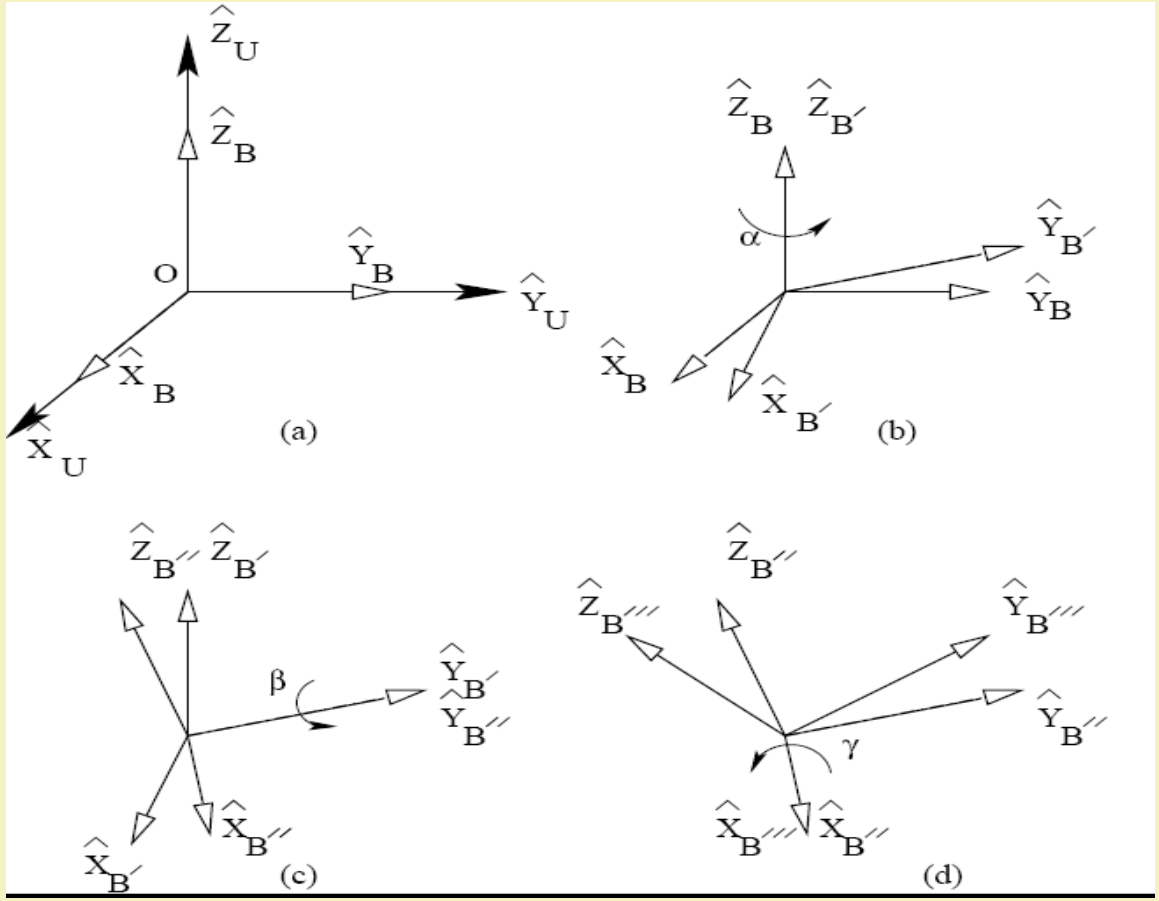

$${}^{U}_{B}R = {}^{B}_{U}R^{-1}$$

Steps:

1. Rotate {B} about $\hat{Z}_B$ by an angle α in anti-clockwise sense
2. Rotate {B} about $\hat{Y}_{B'}$ by an angle β in anti-clockwise sense
3. Rotate {B} about $\hat{X}_{B''}$ by an angle γ in anti-clockwise sense

$$ {}^{B}_{U}R_{Eulerangles} = ROT\left(\hat{X}_{B''}, -\gamma\right) ROT\left(\hat{Y}_{B'}, -\beta\right) ROT\left(\hat{Z}_{B}, -\alpha\right) $$

$$ {}^{U}_{B}R = \begin{bmatrix} c\alpha c\beta & s\beta s\gamma c\alpha - s\alpha c\gamma & s\beta c\gamma c\alpha + s\alpha s\gamma \\ s\alpha c\beta & s\beta s\gamma s\alpha + c\alpha c\gamma & s\beta c\gamma s\alpha - s\gamma c\alpha \\ -s\beta & c\beta s\gamma & c\beta c\gamma \end{bmatrix} $$

We compare with

$$ {}^{U}_{B}R = \begin{bmatrix} r_{11} & r_{12} & r_{13} \\ r_{21} & r_{22} & r_{23} \\ r_{31} & r_{32} & r_{33} \end{bmatrix} $$

$$\alpha = \tan^{-1}\left(\frac{r_{21}}{r_{11}}\right)$$

$$\beta = \tan^{-1}\left(\frac{-r_{31}}{\sqrt{r_{11}^2 + r_{21}^2}}\right)$$

$$\gamma = \tan^{-1}\left(\frac{r_{32}}{r_{33}}\right)$$

Denavit-Hartenberg Notations

- Proposed in the year 1955

Notes:

- **Revolute joint:** θ_i is variable
- **Prismatic joint:** d_i is variable

Link and Joint Parameters

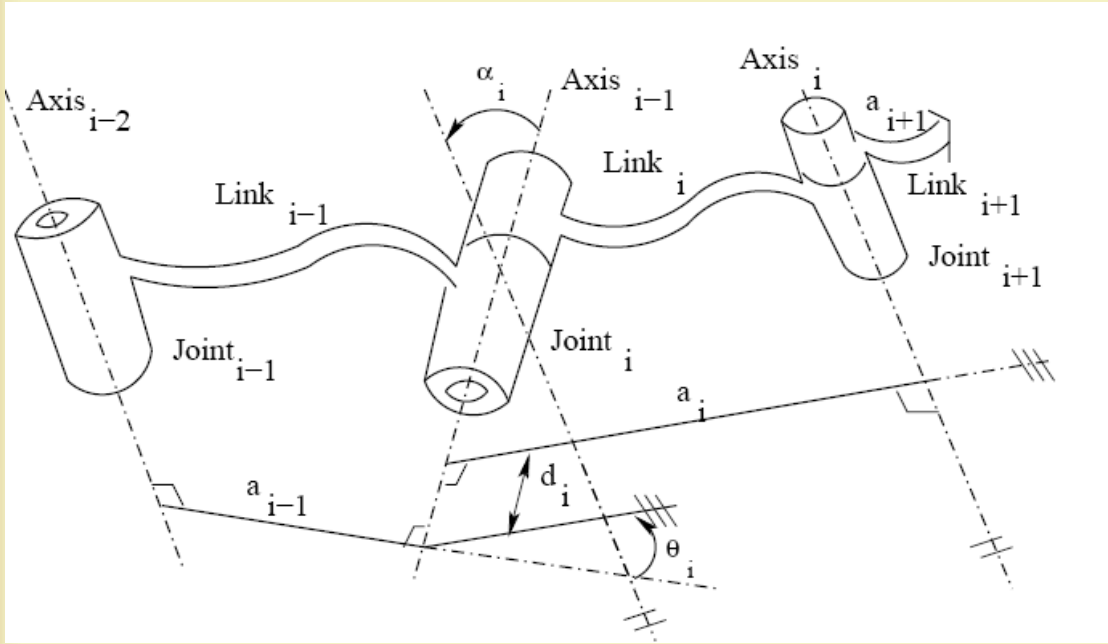

- Link Parameter is used to find Structure of link
- Joint Parameters are used to find the relative position of neighbouring links

- **Length of link$_i$ (a_i):** It is the mutual perpendicular distance between Axis$_{i-1}$ and Axis$_i$
- **Angle of twist of link_i (α_i):** It is defined as the angle between Axis$_{i-1}$ and Axis$_i$
- **Offset of link$_i$ (d_i):** It is the distance measured from a point where a_{i-1} intersects the Axis$_{i-1}$ to the point where a_i intersects the Axis$_{i-1}$ measured along the said axis
- **Joint Angle (θ_i):** It is defined as the angle between the extension of a_{i-1} and a_i measured about the Axis$_{i-1}$

Rules for Coordinate Assignment

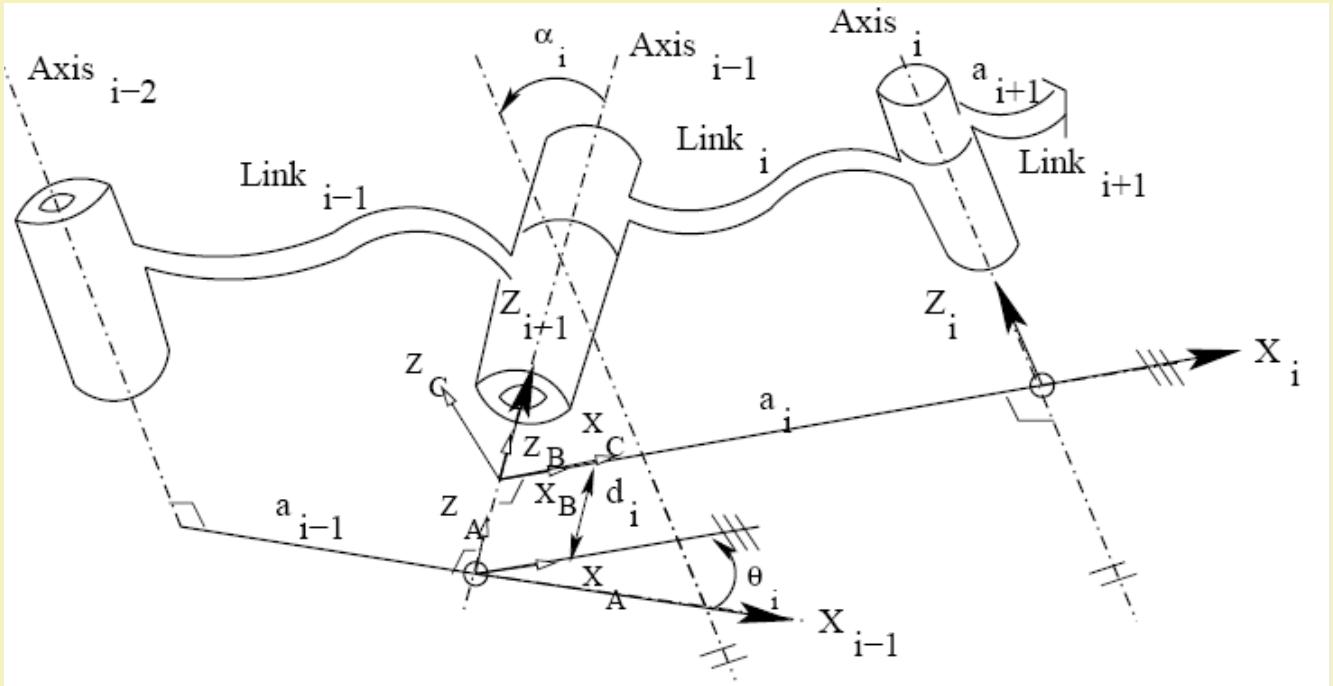

- Z_i is an axis about which the rotation is considered or along which the translation takes place
- If Z_{i-1} and Z_i axes are parallel to each other, X axis will be directed from Z_{i-1} to Z_i along their common normal

Rules for Coordinate Assignment

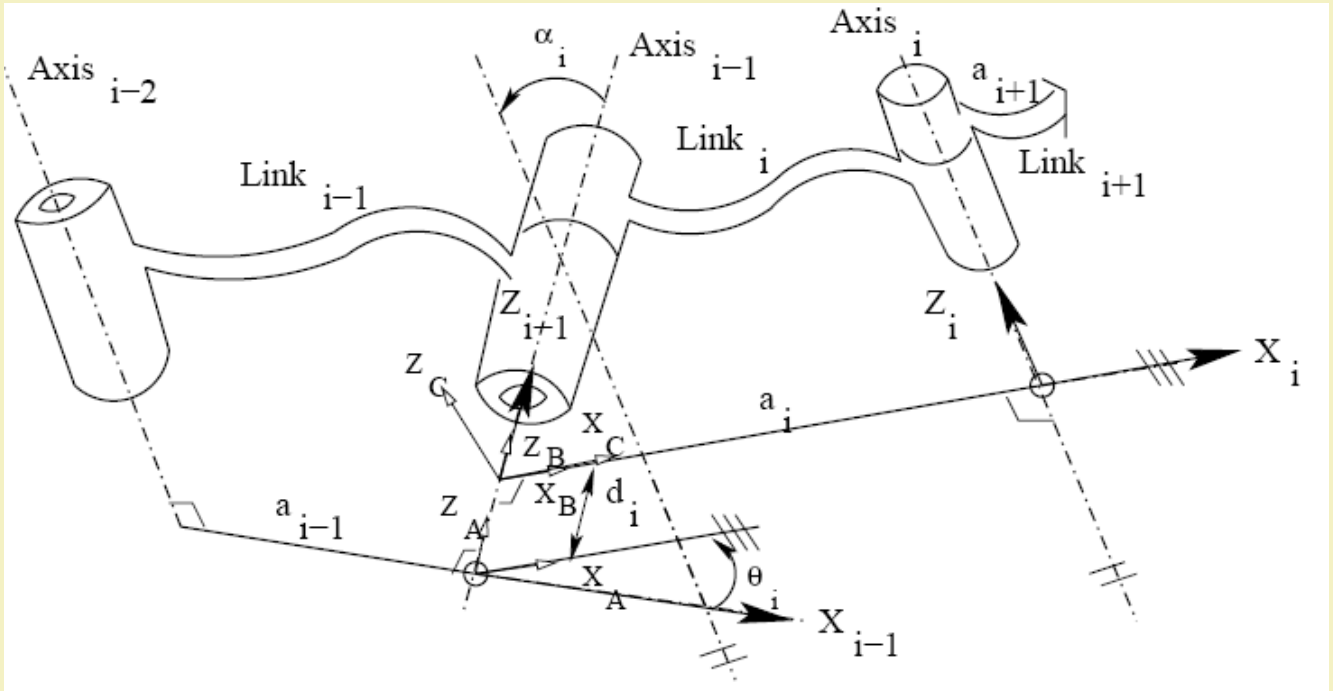

- If Z_{i-1} and Z_i axes intersect each other, X axis can be selected along either of two remaining directions
- If Z_{i-1} and Z_i axes act along a straight line, X axis can be selected anywhere in a plane perpendicular to them
- Y axis is decided as Y = ZxX

We have

$$
\begin{aligned}
{}^{i-1}_{i}T &= {}^{i-1}_{A}T\,{}^{A}_{B}T\,{}^{B}_{C}T\,{}^{C}_{i}T \\
&= \mathrm{ROT}(Z,\theta_i)\,\mathrm{TRANS}(Z,d_i)\,\mathrm{ROT}(X,\alpha_i)\,\mathrm{TRANS}(X,a_i) \\
&= \mathrm{Screw}_Z\,\mathrm{Screw}_X
\end{aligned}
$$

$$
{}^{i-1}_{i}T = \begin{bmatrix} c\theta_i & -s\theta_i c\alpha_i & s\theta_i s\alpha_i & a_i c\theta_i \\ s\theta_i & c\theta_i c\alpha_i & -c\theta_i s\alpha_i & a_i s\theta_i \\ 0 & s\alpha_i & c\alpha_i & d_i \\ 0 & 0 & 0 & 1 \end{bmatrix}
$$

Now, ${}^{i}_{i-1}\mathrm{T} = \left[{}^{i-1}_{i}\mathrm{T} \right]^{-1}$

$$
{}^{i}_{i-1}T = TRANS(X, a_i)\, ROT(X, \alpha_i)\, TRANS(Z, d_i)\, ROT(Z, \theta_i)
$$

$$
= \begin{bmatrix} c\theta_i & s\theta_i & 0 & -a_i \\ -s\theta_i c\alpha_i & c\theta_i c\alpha_i & s\alpha_i & -d_i s\alpha_i \\ s\theta_i s\alpha_i & -c\theta_i s\alpha_i & c\alpha_i & -d_i c\alpha_i \\ 0 & 0 & 0 & 1 \end{bmatrix}
$$

Example 1

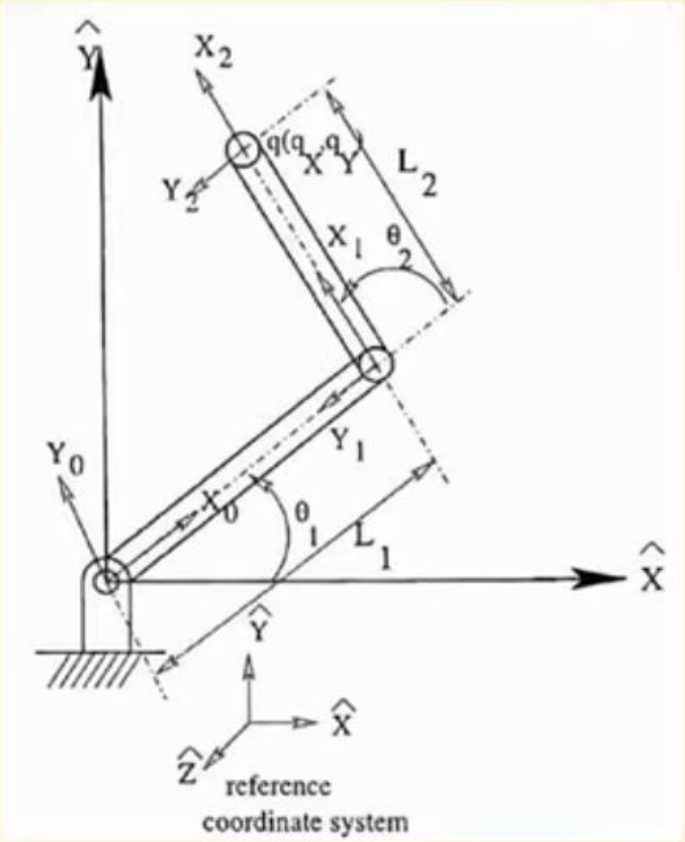

Frame	θ_i	d_i	α_i	a_i
1	θ_1	0	0	L_1
2	θ_2	0	0	L_2

Forward Kinematics

Aim to find the position and orientation of End-effector

$$ {}^{Base}_{2}T = {}^{Base}_{1}T\,{}^{1}_{2}T $$

$$ \begin{aligned} {}^{Base}_{1}T &= ROT(\hat{Z},\theta_1)TRANS(\hat{X},L_1) \\ &= \begin{bmatrix} c_1 & -s_1 & 0 & L_1c_1 \\ s_1 & c_1 & 0 & L_1s_1 \\ 0 & 0 & 1 & 0 \\ 0 & 0 & 0 & 1 \end{bmatrix} \end{aligned} $$

$$ \begin{aligned} {}^{1}_{2}T &= ROT(\hat{Z},\theta_2)TRANS(\hat{X},L_2) \\ &= \begin{bmatrix} c_2 & -s_2 & 0 & L_2c_2 \\ s_2 & c_2 & 0 & L_2s_2 \\ 0 & 0 & 1 & 0 \\ 0 & 0 & 0 & 1 \end{bmatrix} \end{aligned} $$

$$
\begin{aligned}
{}^{Base}_{2}T &= {}^{Base}_{1}T\,{}^{1}_{2}T \\
&= \begin{bmatrix} c_{12} & -s_{12} & 0 & L_1c_1 + L_2c_{12} \\ s_{12} & c_{12} & 0 & L_1s_1 + L_2s_{12} \\ 0 & 0 & 1 & 0 \\ 0 & 0 & 0 & 1 \end{bmatrix}
\end{aligned}
$$

Inverse Kinematics

Aim to determine the joint angles θ_1 and θ_2 where the position and orientation of end-effector is given

$$ {}^{Base}_{2}T = \begin{bmatrix} c\phi & -s\phi & 0 & q_x \\ s\phi & c\phi & 0 & q_y \\ 0 & 0 & 1 & 0 \\ 0 & 0 & 0 & 1 \end{bmatrix}. $$

$$q_x = L_1 c_1 + L_2 c_{12}$$

$$q_y = L_1 s_1 + L_2 s_{12}$$

By squaring and Adding equation the above equation we will get as follows:

$$q_x^2 + q_y^2 = L_1^2 + L_2^2 + 2L_1 L_2 c_{12} c_1 + 2L_1 L_2 s_{12} s_1,$$

$$c_2 = \frac{q_x^2 + q_y^2 - L_1^2 - L_2^2}{2L_1 L_2}$$

$$\theta_2 = \arccos\left(\frac{q_x^2 + q_y^2 - L_1^2 - L_2^2}{2L_1 L_2}\right).$$

$$\begin{aligned} q_x &= L_1 c_1 + L_2 c_1 c_2 - L_2 s_1 s_2 \\ &= c_1(L_1 + L_2 c_2) - s_1(L_2 s_2) \end{aligned}$$

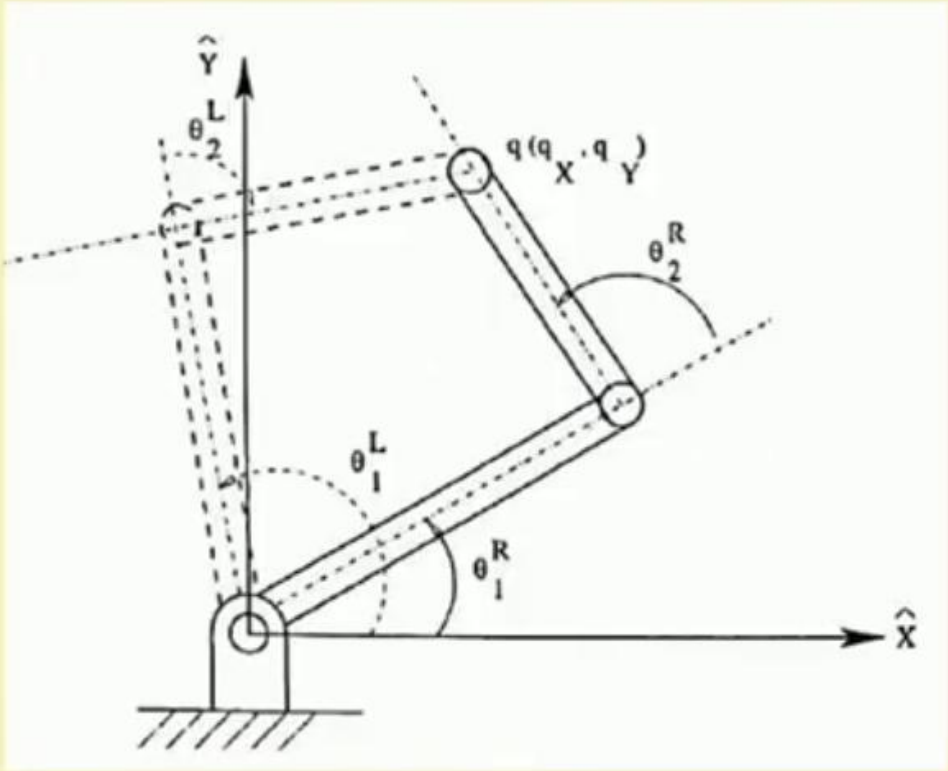

$$q_y = \rho cos(\psi - \theta_1)$$

$$\theta_1 = \psi - \arctan(\frac{q_x}{q_y})$$

Example 2

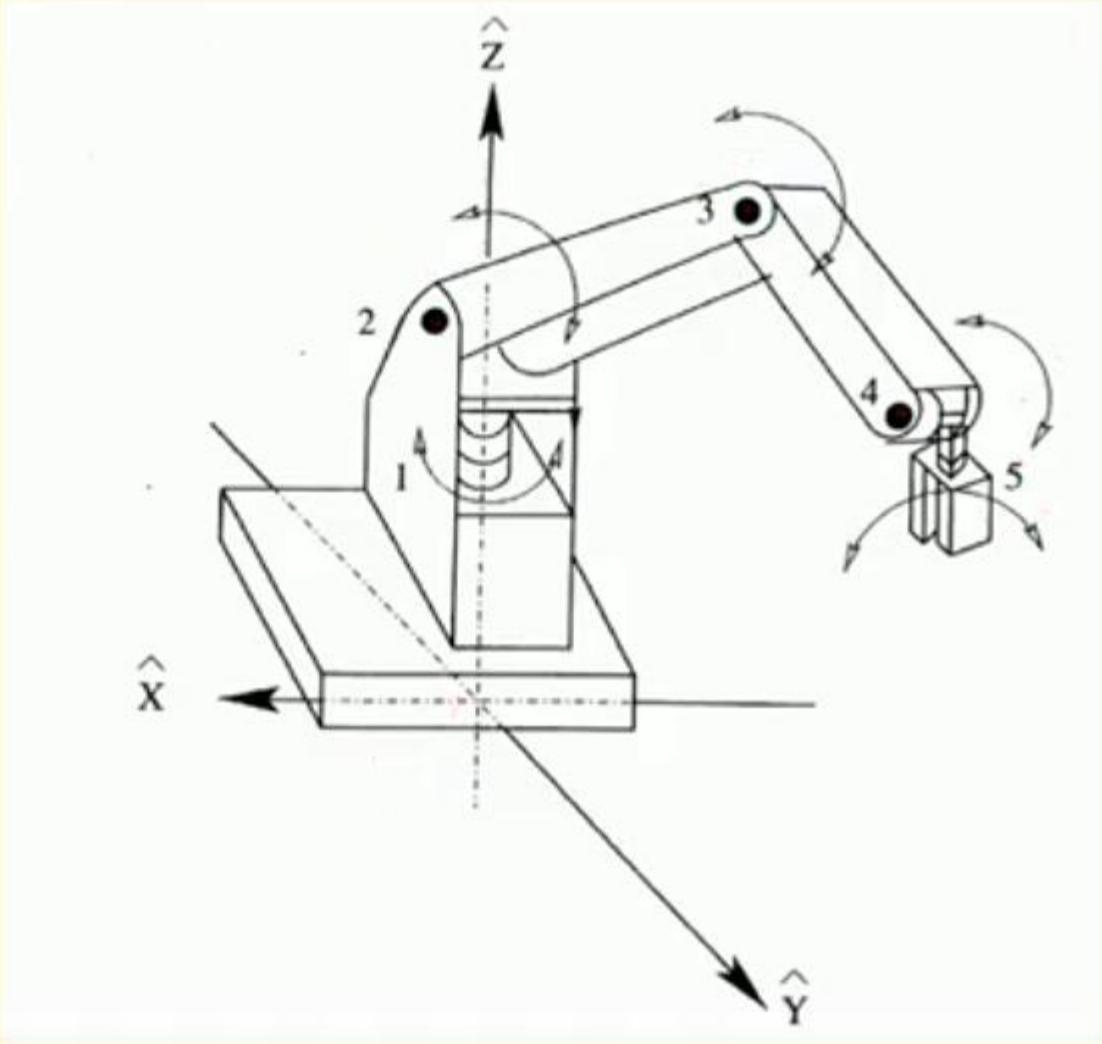

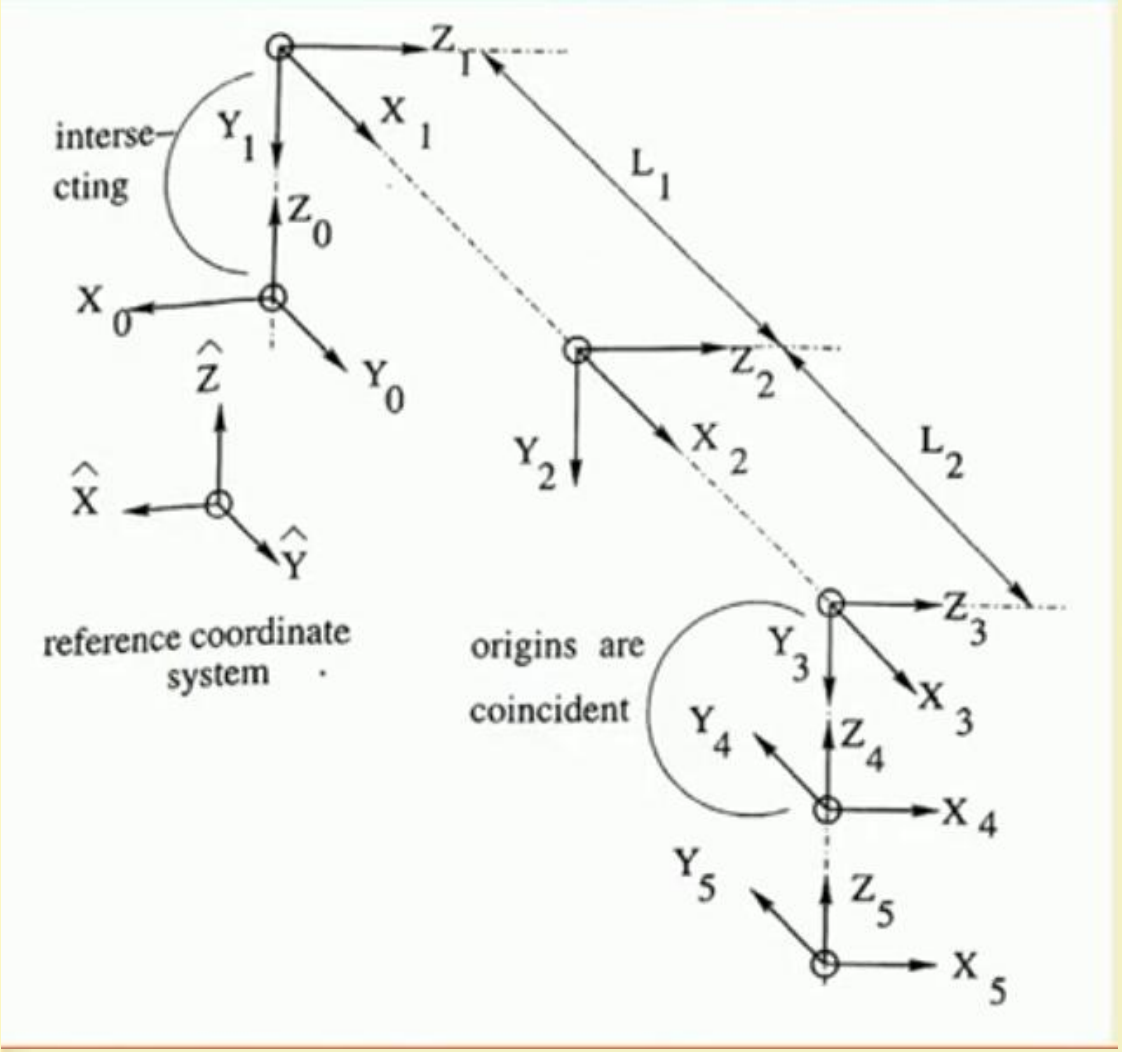

Frame	θ_i	d_i	α_i	a_i
1	θ_1	0	-90	0
2	θ_2	0	0	L_1
3	θ_3	0	0	L_2
4	θ_4	0	90	0
5	θ_5	0	0	0

Forward Kinematics

$$ {}^{0}_{5}T = {}^{0}_{1}T\,{}^{1}_{2}T\,{}^{2}_{3}T\,{}^{3}_{4}T\,{}^{4}_{5}T $$

$$ \begin{aligned} {}^{0}_{1}T &= Rot(\hat{Z}, \theta_1) Rot(\hat{X}, -90) \\ &= \begin{bmatrix} c_1 & 0 & -s_1 & 0 \\ s_1 & 0 & c_1 & 0 \\ 0 & -1 & 0 & 0 \\ 0 & 0 & 0 & 1 \end{bmatrix} \end{aligned} $$

Here, c_1 and s_1 denote $c\theta_1$ (or, $cos\theta_1$) and $s\theta_1$ (or, $sin\theta_1$), respectively.

$$
{}^{0}_{1}T^{-1} = \begin{bmatrix} c_1 & s_1 & 0 & 0 \\ 0 & 0 & -1 & 0 \\ -s_1 & c_1 & 0 & 0 \\ 0 & 0 & 0 & 1 \end{bmatrix}
$$

$$
{}^{1}_{2}T = Rot(\hat{Z}, \theta_2) Trans(\hat{X}, L_1)
$$

$$
= \begin{bmatrix} c_2 & -s_2 & 0 & L_1 c_2 \\ s_2 & c_2 & 0 & L_1 s_2 \\ 0 & 0 & 1 & 0 \\ 0 & 0 & 0 & 1 \end{bmatrix}
$$

$$
{}^{2}_{3}T = Rot(\hat{Z}, \theta_3) Trans(\hat{X}, L_2)
$$

$$
= \begin{bmatrix} c_3 & -s_3 & 0 & L_2 c_3 \\ s_3 & c_3 & 0 & L_2 s_3 \\ 0 & 0 & 1 & 0 \\ 0 & 0 & 0 & 1 \end{bmatrix}
$$

$$
{}^{3}_{4}T = Rot(\hat{Z}, \theta_4) Rot(\hat{X}, 90)
$$

$$
= \begin{bmatrix} c_4 & 0 & s_4 & 0 \\ s_4 & 0 & -c_4 & 0 \\ 0 & 1 & 0 & 0 \\ 0 & 0 & 0 & 1 \end{bmatrix}
$$

$$
{}^{4}_{5}T = Rot(\hat{Z}, \theta_5)
$$

$$
= \begin{bmatrix} c_5 & -s_5 & 0 & 0 \\ s_5 & c_5 & 0 & 0 \\ 0 & 0 & 1 & 0 \\ 0 & 0 & 0 & 1 \end{bmatrix}
$$

$$
\begin{aligned}
{}^0_5T &= {}^0_1T\,{}^1_2T\,{}^2_3T\,{}^3_4T\,{}^4_5T \\
&= \begin{bmatrix} v_{11} & v_{12} & v_{13} & p_x \\ v_{21} & v_{22} & v_{23} & p_y \\ v_{31} & v_{32} & v_{33} & p_z \\ 0 & 0 & 0 & 1 \end{bmatrix}
\end{aligned}
$$

$$
\begin{aligned}
v_{11} &= c_1c_{234}c_5 - s_1s_5 \\
v_{12} &= -c_1c_{234}s_5 - s_1c_5 \\
v_{13} &= c_1s_{234} \\
v_{21} &= s_1c_{234}c_5 + c_1s_5 \\
v_{22} &= -s_1c_{234}s_5 + c_1c_5 \\
v_{23} &= s_1s_{234} \\
v_{31} &= -s_{234}c_5 \\
v_{32} &= s_{234}s_5 \\
v_{33} &= c_{234} \\
p_x &= c_1(L_1c_2 + L_2c_{23}) \\
p_y &= s_1(L_1c_2 + L_2c_{23}) \\
p_z &= -L_1s_2 - L_2s_{23}
\end{aligned}
$$

Inverse Kinematics

$$ {}^{0}_{5}T = \begin{bmatrix} r_{11} & r_{12} & r_{13} & q_x \\ r_{21} & r_{22} & r_{23} & q_y \\ r_{31} & r_{32} & r_{33} & q_z \\ 0 & 0 & 0 & 1 \end{bmatrix} $$

$$ \begin{aligned} {}^{0}_{5}T &= {}^{0}_{1}T\,{}^{1}_{2}T\,{}^{2}_{3}T\,{}^{3}_{4}T\,{}^{4}_{5}T \\ \Rightarrow\ {}^{0}_{1}T^{-1}({}^{0}_{5}T) &= {}^{1}_{2}T\,{}^{2}_{3}T\,{}^{3}_{4}T\,{}^{4}_{5}T \end{aligned} $$

$$\Rightarrow \begin{bmatrix} c_1 & s_1 & 0 & 0 \\ 0 & 0 & -1 & 0 \\ -s_1 & c_1 & 0 & 0 \\ 0 & 0 & 0 & 1 \end{bmatrix} \begin{bmatrix} r_{11} & r_{12} & r_{13} & q_x \\ r_{21} & r_{22} & r_{23} & q_y \\ r_{31} & r_{32} & r_{33} & q_z \\ 0 & 0 & 0 & 1 \end{bmatrix} =$$

$$\begin{bmatrix} c_{234}c_5 & -c_{234}s_5 & s_{234} & L_1c_2 + L_2c_{23} \\ s_{234}c_5 & -s_{234}s_5 & -c_{234} & L_1s_2 + L_2s_{23} \\ s_5 & c_5 & 0 & 0 \\ 0 & 0 & 0 & 1 \end{bmatrix}$$

$$\Rightarrow \begin{bmatrix} r_{11}c_1 + r_{21}s_1 & r_{12}c_1 + r_{22}s_1 & r_{13}c_1 + r_{23}s_1 & q_xc_1 + q_ys_1 \\ -r_{31} & -r_{32} & -r_{33} & -q_z \\ -r_{11}s_1 + r_{21}c_1 & -r_{12}s_1 + r_{22}c_1 & -r_{13}s_1 + r_{23}c_1 & -q_xs_1 + q_yc_1 \\ 0 & 0 & 0 & 1 \end{bmatrix} =$$

$$\begin{bmatrix} c_{234}c_5 & -c_{234}s_5 & s_{234} & L_1c_2 + L_2c_{23} \\ s_{234}c_5 & -s_{234}s_5 & -c_{234} & L_1s_2 + L_2s_{23} \\ s_5 & c_5 & 0 & 0 \\ 0 & 0 & 0 & 1 \end{bmatrix}$$

$$q_x c_1 + q_y s_1 = L_1 c_2 + L_2 c_{23}$$

$$-q_x s_1 + q_y c_1 = 0$$

$$q_z = -L_1 s_2 - L_2 s_{23}$$

$$s_{234} = r_{13} c_1 + r_{23} s_1$$

$$c_{234} = r_{33}$$

$$-r_{11} s_1 + r_{21} c_1 = s_5$$

$$-r_{12} s_1 + r_{22} c_1 = c_5$$

$$\begin{aligned} -q_x s_1 + q_y c_1 &= 0 \\ \Rightarrow \theta_1 &= \arctan\left(\frac{q_y}{q_x}\right) \end{aligned}$$

$$
\begin{aligned}
q_x^2 + q_y^2 + q_z^2 &= L_1^2 + L_2^2 + 2L_1L_2c_3 \\
\Rightarrow \theta_3 &= \arccos\left(\frac{q_x^2 + q_y^2 + q_z^2 - L_1^2 - L_2^2}{2L_1L_2}\right)
\end{aligned}
$$

$$
\begin{aligned}
L_1c_2 + L_2c_{23} &= q_xc_1 + q_ys_1 \\
\Rightarrow (L_1 + L_2c_3)c_2 - (L_2s_3)s_2 &= q_xc_1 + q_ys_1
\end{aligned}
$$

Let us assume $L_1 + L_2c_3 = \rho\sin\alpha$ and $L_2s_3 = \rho\cos\alpha$, where $\rho \neq 0$ and $\rho = \sqrt{(L_1 + L_2c_3)^2 + (L_2s_3)^2}$; $\alpha = \arctan(\frac{L_1+L_2c_3}{L_2s_3})$. Thus, the above expression can be written as follows:

$$\rho \sin \alpha c_2 - \rho \cos \alpha s_2 \quad = \quad q_x c_1 + q_y s_1$$

$$\rho \sin(\alpha - \theta_2) = q_x c_1 + q_y s_1$$

$$\rho \cos(\alpha - \theta_2) = -q_z$$

$$\tan(\alpha - \theta_2) = \frac{q_x c_1 + q_y s_1}{-q_z}$$

$$\Rightarrow \theta_2 = \alpha - \arctan\left(\frac{q_x c_1 + q_y s_1}{-q_z}\right)$$

$$\theta_2 + \theta_3 + \theta_4 = \arctan\left(\frac{r_{13} c_1 + r_{23} s_1}{r_{33}}\right)$$

$$\Rightarrow \theta_4 = \arctan\left(\frac{r_{13} c_1 + r_{23} s_1}{r_{33}}\right) - \theta_2 - \theta_3$$

$$\theta_5 = \arctan\left(\frac{-r_{11} s_1 + r_{21} c_1}{-r_{12} s_1 + r_{22} c_1}\right)$$

An Example

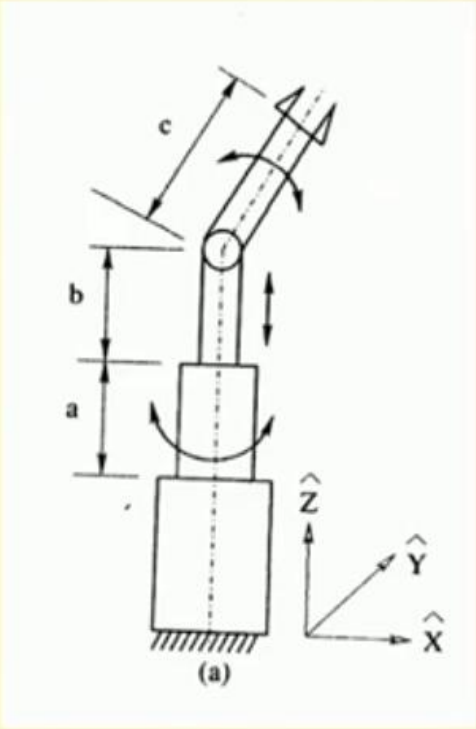

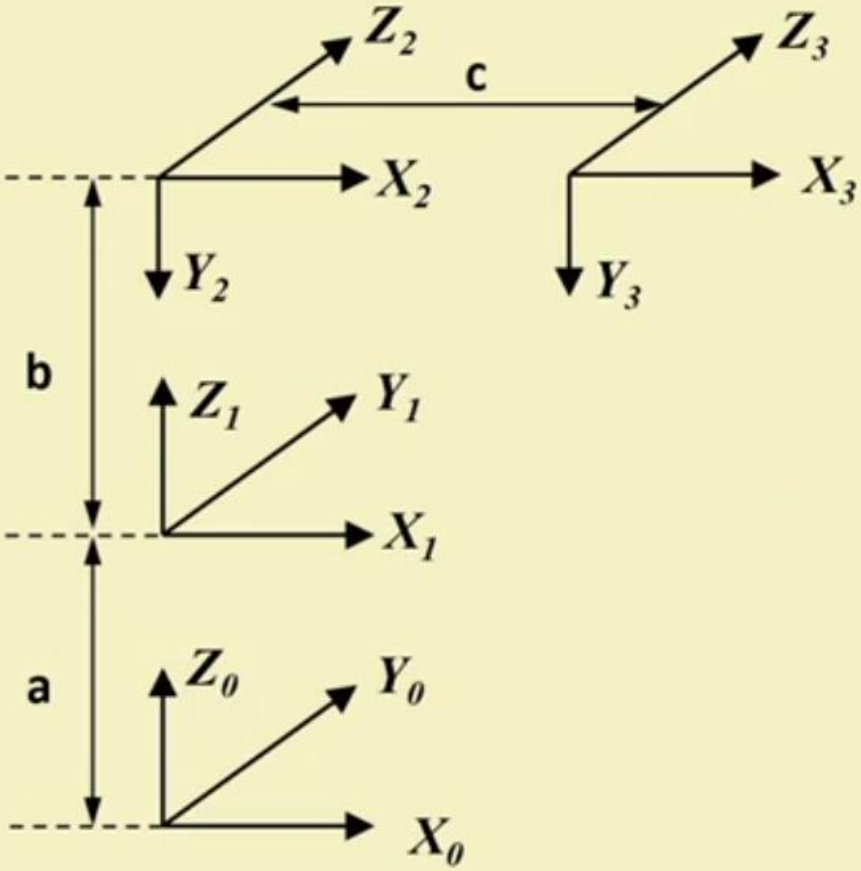

D-H parameters' table:

Frame	θ_i	d_i	α_i	a_i
1	θ_1	a*	0	0
2	0	b	-90	0
3	θ_3	0	0	c

a*: fixed offset

Another Example

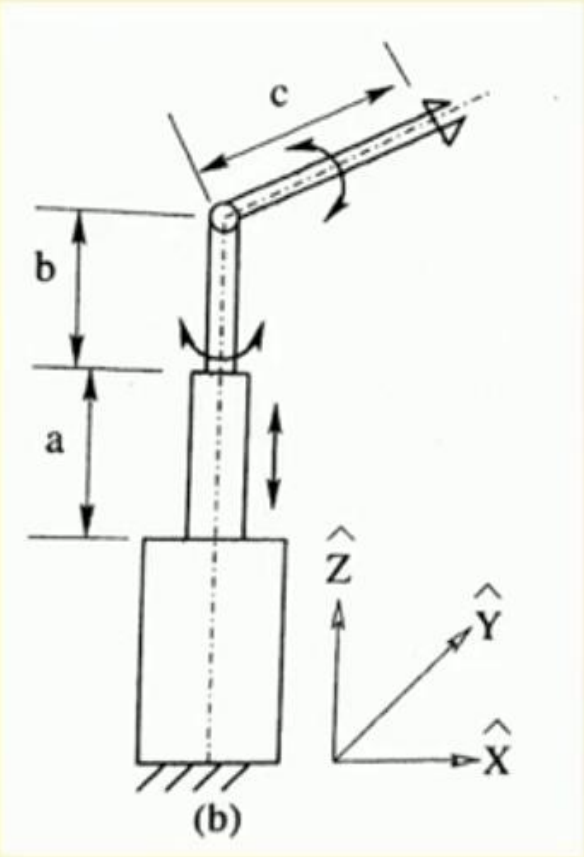

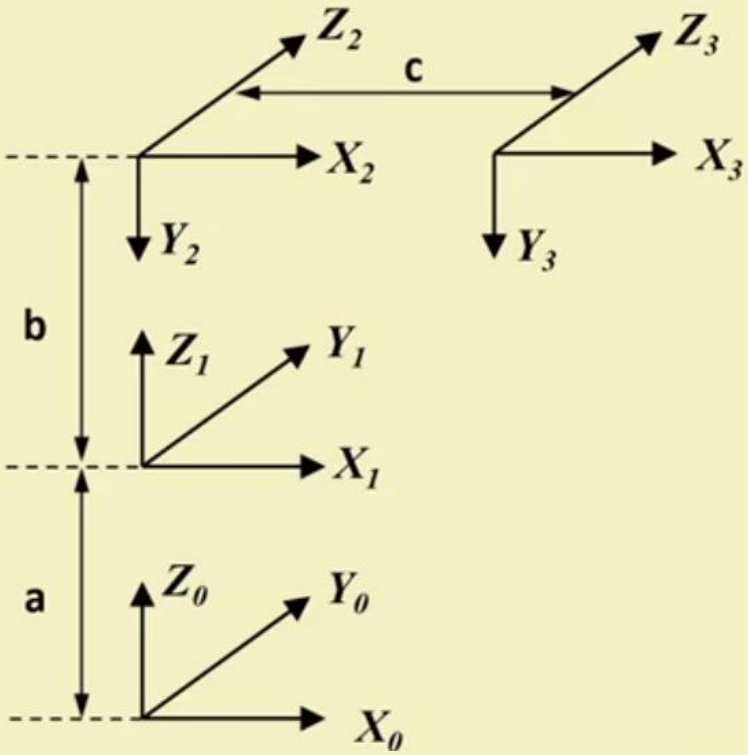

D-H parameters' table:

Frame	θ_i	d_i	α_i	a_i
1	0	a	0	0
2	θ_2	b*	-90	0
3	θ_3	0	0	c

b*: fixed offset

Aim: To determine time history of position, velocity and acceleration of end-effector of a manipulator, while moving from an initial position to a final position through some intermediate/via points.

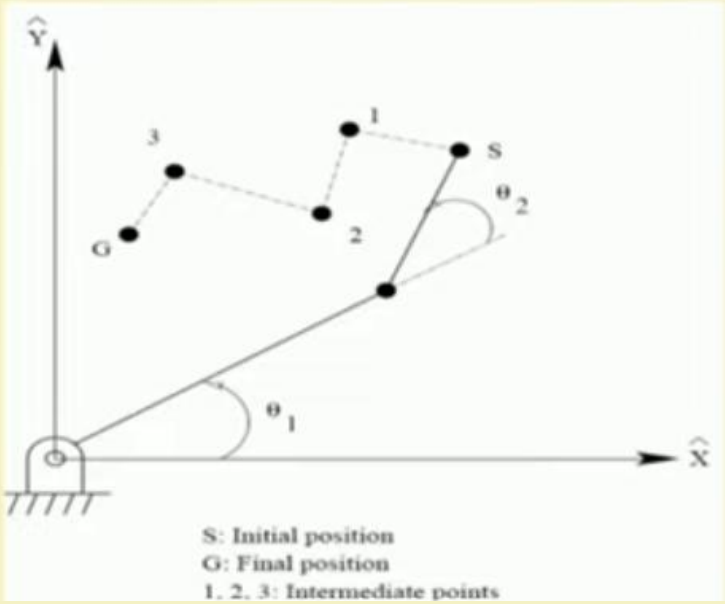

Points	Cartesian scheme	Joint-space scheme
S	(X_S, Y_S)	(θ_1^S, θ_2^S)
1	(X_1, Y_1)	(θ_1^1, θ_2^1)
2	(X_2, Y_2)	(θ_1^2, θ_2^2)
3	(X_3, Y_3)	(θ_1^3, θ_2^3)
G	(X_G, Y_G)	(θ_1^G, θ_2^G)

Trajectory Planning

Cartesian scheme

- Computationally expensive, as inverse kinematics problem has to be solved, on-line

Joint-space scheme

Joint-Space Scheme

- To fit a smooth (continuous) curve through $(\theta_1^S, \theta_1^1, \theta_1^2, \theta_1^3, \theta_1^G)$
- First and second order derivatives must be continuous.

Various Trajectory Functions

- Cubic polynomial
- Fifth-order polynomial
- Linear trajectory function

POLYNOMIAL TRAJECTORY FUNCTION

Case-1

Initial and final values of joint angle are known, and angular velocities at the beginning and end of the cycle are kept equal to zero.

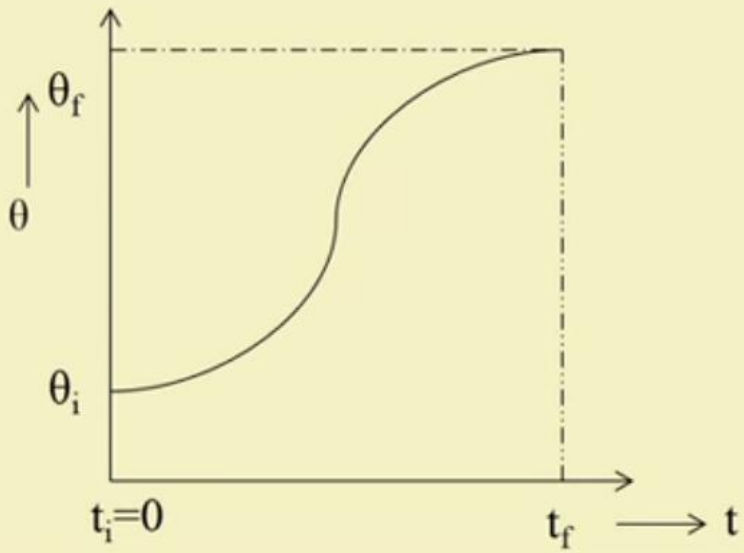

$$\text{At } t = t_i = 0;\ \theta = \theta_i,\ \dot{\theta} = 0$$

$$\text{At } t = t_f;\ \theta = \theta_f,\ \dot{\theta} = 0$$

Let us consider cubic polynomial

$$\theta(t) = C_0 + C_1 t + C_2 t^2 + C_3 t^3$$

where C_0, C_1, C_2, C_3 are the coefficients.

Differentiate $\theta(t)$ with respect to time to get angular velocity

$$\dot{\theta}(t) = C_1 + 2C_2 t + 3C_3 t^2$$

Apply the initial conditions to angular displacement and velocity equations. We get,

$$C_0 = \theta_i$$

$$C_1 = 0$$

$$C_0 + C_1 t_f + C_2 t_f^2 + C_3 t_f^3 = \theta_f$$

$$C_1 + 2C_2 t_f + 3C_3 t_f^2 = 0$$

Solving above equations, We get

$$\theta(\mathrm{t}) = \theta_{\mathrm{i}} + \frac{3(\theta_{\mathrm{f}} - \theta_{\mathrm{i}})}{\mathrm{t}_{\mathrm{f}}^2} t^2 - \frac{2(\theta_{\mathrm{f}} - \theta_{\mathrm{i}})}{\mathrm{t}_{\mathrm{f}}^3} t^3$$

Case-2

Initial and final values of joint angle are known and angular velocities at the beginning and end of the cycle are assumed to have non zero values.

At $t = t_i = 0;\ \theta = \theta_i,\ \dot{\theta} = \dot{\theta}_i$

At $t = t_f;\ \theta = \theta_f,\ \dot{\theta} = \dot{\theta}_f$

Let us consider a third order polynomial of the form:

$$\theta(t) = C_0 + C_1 t + C_2 t^2 + C_3 t^3$$

where C_0, C_1, C_2, C_3 **are the coefficients.**

Differentiate $\theta(t)$ with respect to time to get angular velocity

$$\dot{\theta}(t) = C_1 + 2C_2 t + 3C_3 t^2$$

Apply the initial conditions to angular displacement and velocity equations. We get,

$$C_0 = \theta_i$$

$$C_1 = \dot{\theta}_i$$

$$C_0 + C_1 t_f + C_2 t_f^2 + C_3 t_f^3 = \theta_f$$

$$C_1 + 2C_2 t_f + 3C_3 t_f^2 = \dot{\theta}_f$$

Solving above equations, We get

$$C_0 = \theta_i,$$

$$C_1 = \dot{\theta}_i,$$

$$C_2 = \frac{3(\theta_f - \theta_i)}{t_f^2} - \frac{2}{t_f}\dot{\theta}_i - \frac{1}{t_f}\dot{\theta}_f,$$

$$C_3 = -\frac{2(\theta_f - \theta_i)}{t_f^3} + \frac{1}{t_f^2}(\dot{\theta}_f + \dot{\theta}_i).$$

Case-3

Initial and final values of joint angle are known and angular velocities and accelerations at the beginning and end of the cycle are assumed to have non zero values.

At $t = t_i = 0;\ \theta = \theta_i,\ \dot{\theta} = \dot{\theta}_i,\ \ddot{\theta} = \ddot{\theta}_i$

At $t = t_f;\ \theta = \theta_f,\ \dot{\theta} = \dot{\theta}_f,\ \ddot{\theta} = \ddot{\theta}_f$

Let us consider a fifth-order polynomial as follows:

$$\theta(t) = C_0 + C_1 t + C_2 t^2 + C_3 t^3 + C_4 t^4 + C_5 t^5$$

where C_0, C_1, C_2, C_3, C_4 **and** C_5 **are the coefficients.**

Differentiate $\theta(t)$ **with respect to time once to get angular velocity and twice to get angular acceleration**

$$\dot{\theta}(t) = c_1 + 2c_2 t + 3c_3 t^2 + 4c_4 t^3 + 5c_5 t^4$$

$$\ddot{\theta}(t) = 2c_2 + 6c_3 t + 12c_4 t^2 + 20c_5 t^3$$

Apply the initial conditions to angular displacement, velocity and acceleration equations. We get,

$$c_0 = \theta_i$$

$$c_1 = \dot{\theta}_i$$

$$c_2 = \frac{1}{2}\ddot{\theta}_i$$

$$c_0 + c_1 t_f + c_2 t_f^2 + c_3 t_f^3 + c_4 t_f^4 + c_5 t_f^5 = \theta_f$$

$$c_1 + 2c_2 t_f + 3c_3 t_f^2 + 4c_4 t_f^3 + 5c_5 t_f^4 = \dot{\theta}_f$$

$$2c_2 + 6c_3 t_f + 12c_4 t_f^2 + 20c_5 t_f^3 = \ddot{\theta}_f$$

Solving above equations, We get

$$C_0 = \theta_i,$$

$$C_1 = \dot{\theta}_i,$$

$$C_2 = \tfrac{1}{2}\ddot{\theta}_i$$

$$C_3 = \frac{20(\theta_f - \theta_i) - (8\dot{\theta}_f + 12\dot{\theta}_i)t_f - (3\ddot{\theta}_i - \ddot{\theta}_f)t_f^2}{2t_f^3}$$

$$C_4 = \frac{30(\theta_i - \theta_f) + (14\dot{\theta}_f + 16\dot{\theta}_i)t_f + (3\ddot{\theta}_i - 2\ddot{\theta}_f)t_f^2}{2t_f^4}$$

$$C_5 = \frac{12(\theta_f - \theta_i) - 6(\dot{\theta}_f + \dot{\theta}_i)t_f - (\ddot{\theta}_i - \ddot{\theta}_f)t_f^2}{2t_f^5}$$

A Numerical Example

- **A single-link robot with a revolute joint is motionless at θ = 20º. It is desired to move the joint in a smooth manner to θ = 80º in 4.0 seconds. Find a suitable cubic polynomial to generate this motion and bring the manipulator to rest at the goal.**

Solution:

cubic polynomial

$$\theta(t) = C_0 + C_1 t + C_2 t^2 + C_3 t^3 \quad \text{------- (1)}$$

$$\theta(t) = \theta_i + \frac{3(\theta_f - \theta_i)}{t_f^2} t^2 - \frac{2(\theta_f - \theta_i)}{t_f^3} t^3$$

$$= 20 + \frac{3(80-20)}{(4.0)^2} t^2 - \frac{2(80-20)}{(4.0)^3} t^3$$

$$= 20 + 11.25 t^2 - 1.875 t^3$$

Conditions:

At time $t = t_i = 0,$

$\theta = \theta_i = 20^{\circ},$

$\dot{\theta} = 0;$

At time $t = t_f = 4.0$ s,

$\theta = \theta_f = 80^{\circ},$

$\dot{\theta} = 0;$

LINEAR TRAJECTORY FUNCTION

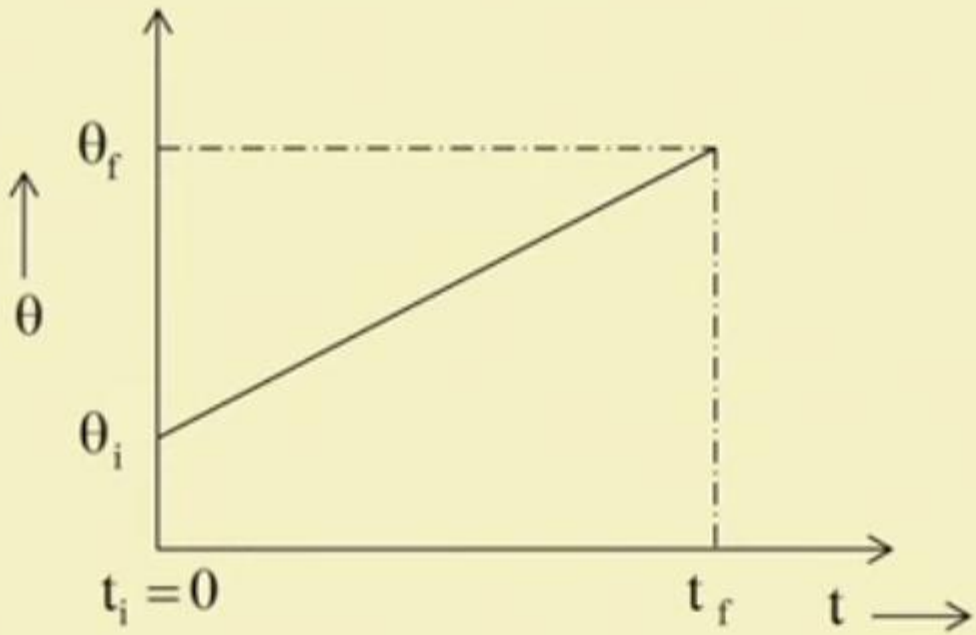

(Pure Linear Trajectory Function)

Note: Infinite acceleration and declaration.

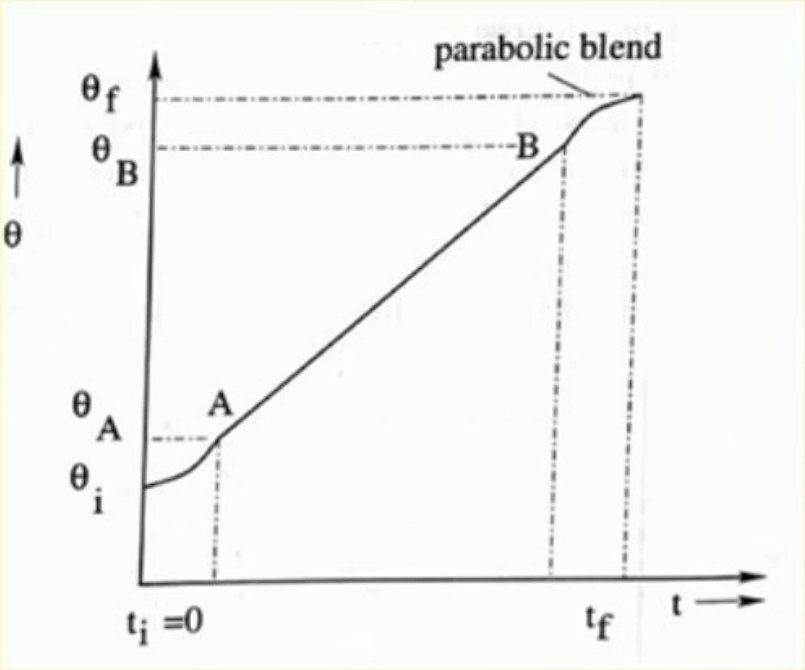

(Modified Linear trajectory function with parabolic blends)

A Numerical Example

- A linear trajectory function with parabolic blends at its two ends is to be obtained to satisfy the following conditions given below.

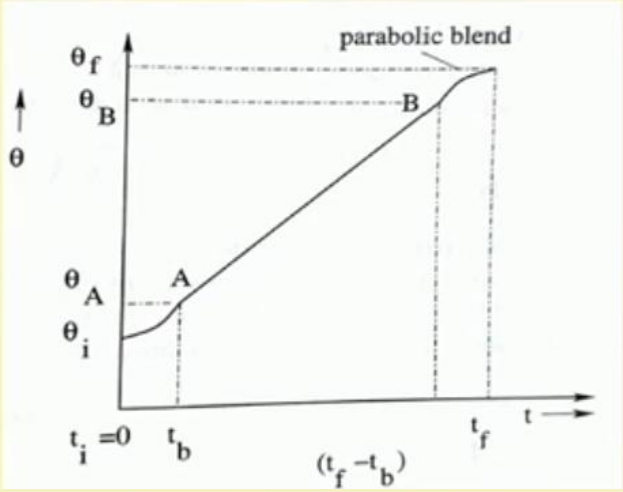

At time $t = t_i = 0,$

$\theta = \theta_i = 20.0^{\circ},$

$\dot{\theta} = 0.0;$

At time $t = t_f = 12.0$ s,

$\theta = \theta_f = 74.0^{\circ},$

$\dot{\theta} = 0.0;$

Total cycle time $t_c = t_f - t_i = 12.0$ s

Time duration at each of the blend portion $t_b = 3.0$ s

Magnitude of acceleration/deceleration

$\ddot{\theta} = 2.0$ degree/s^2

Determine angular displacement and velocity at two junctions of parabolic blends with the straight portion of trajectory function.

Solution:

At point A

Angular displacement

$$\theta_A = \theta_i + \frac{1}{2} \times \ddot{\theta} \times t_b^2 = 20.0 + \frac{1}{2} \times (2.0) \times (3.0)^2$$

$$= 29.0^{\circ}$$

Angular velocity

$$\dot{\theta}_A = \dot{\theta}_i + \ddot{\theta} \times t_b = 0.0 + 2.0 \times 3.0$$

$$= 6.0 \text{ degree/s}$$

At point B: From the symmetry of the trajectory function,

$$\theta_f - \theta_B = \theta_A - \theta_i$$

$$74.0 - \theta_B = 29.0 - 20.0$$

$$\theta_B = 65.0^{\circ}$$

Angular velocity in the linear portion of trajectory function

$$= \frac{\theta_B - \theta_A}{t_f - 2t_b}$$

$$= \frac{65.0 - 29.0}{12.0 - 2 \times 3.0} = \frac{36.0}{6.0} = 6.0 \text{ degree/s}$$

To maintain continuity of the trajectory function at point B, $\dot{\theta}_B$ Should be equal to the velocity of the linear portion, that is, 6.0 degree per second.

SINGULARITY CHECKING THROUGH JACOBIAN

Let us consider six functions and each of which is a function of six Independent variables.

$$y_1 = f_1(x_1, x_2, x_3, x_4, x_5, x_6)$$
$$y_2 = f_2(x_1, x_2, x_3, x_4, x_5, x_6)$$
$$\vdots$$
$$y_6 = f_6(x_1, x_2, x_3, x_4, x_5, x_6)$$

In vector notation: $Y = F(X)$

Now,

$$\delta y_1 = \frac{\partial f_1}{\partial x_1}\delta x_1 + \frac{\partial f_1}{\partial x_2}\delta x_2 + ... + \frac{\partial f_1}{\partial x_6}\delta x_6$$
$$\delta y_2 = \frac{\partial f_2}{\partial x_1}\delta x_1 + \frac{\partial f_2}{\partial x_2}\delta x_2 + ... + \frac{\partial f_2}{\partial x_6}\delta x_6$$
$$\vdots$$
$$\delta y_6 = \frac{\partial f_6}{\partial x_1}\delta x_1 + \frac{\partial f_6}{\partial x_2}\delta x_2 + ... + \frac{\partial f_6}{\partial x_6}\delta x_6$$

In vector notation: $\delta Y = J(X)\delta X$

where J(X) is Jacobian.

$$J = \begin{bmatrix} \frac{\partial f_1}{\partial x_1} & \frac{\partial f_1}{\partial x_2} & \cdots & \frac{\partial f_1}{\partial x_6} \\ \frac{\partial f_2}{\partial x_1} & \frac{\partial f_2}{\partial x_2} & \cdots & \frac{\partial f_2}{\partial x_6} \\ . & & & \\ . & & & \\ \frac{\partial f_6}{\partial x_1} & \frac{\partial f_6}{\partial x_2} & \cdots & \frac{\partial f_6}{\partial x_6} \end{bmatrix}$$

Now,

$$\lim_{\delta t \to 0} \frac{\delta Y}{\delta t} = \lim_{\delta t \to 0} J(X) \frac{\delta X}{\delta t}$$

$$\Rightarrow \dot{Y} = J(X)\dot{X}$$

In Robotics,

$$V = J(\theta)\dot{\theta}$$

Cartesian Velocity

Jacobian

Joint Velocity

TWO DOF SERIAL MANIPULATOR

$$P_x = L_1 \cos\theta_1 + L_2 \cos(\theta_1 + \theta_2)$$

$$\frac{\partial P_x}{\partial \theta_1} = -L_1 \sin\theta_1 - L_2 \sin(\theta_1 + \theta_2)$$

$$\frac{\partial P_x}{\partial \theta_2} = -L_2 \sin(\theta_1 + \theta_2)$$

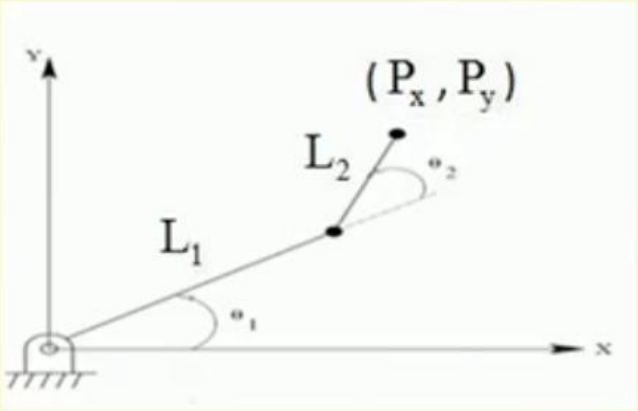

$$P_y = L_1 \sin\theta_1 + L_2 \sin(\theta_1 + \theta_2)$$

$$\frac{\partial P_y}{\partial \theta_1} = L_1 \cos\theta_1 + L_2 \cos(\theta_1 + \theta_2)$$

$$\frac{\partial P_y}{\partial \theta_2} = L_2 \cos(\theta_1 + \theta_2)$$

Jacobian $J(\theta) = \begin{pmatrix} -L_1S_1 - L_2S_{12} & -L_2S_{12} \\ L_1C_1 + L_2C_{12} & L_2C_{12} \end{pmatrix}$

Now, $\dot{\theta} = J^{-1}(\theta)\, V$

$J^{-1}(\theta)$ **should exist, that is,** $|J(\theta)| \neq 0$

For Singularity Checking

$$|J(\theta)| = 0$$

$$\Rightarrow L_1 L_2 S_2 = 0$$

Now,

$L_1 \neq 0, L_2 \neq 0,$

$S_2 = 0$

So,

$\theta_2 = 0^0 \text{ or } 180^0$

When

$\theta_2 = 0^0; \longrightarrow$ **Fully- Stretched**

$\theta_2 = 180^0; \longrightarrow$ **Folded-back Situation**